GEOPHYTA

Home Septic System
Site Evaluation
And
Replacement System Design

For

Ronald Bogner

3476 C.R. 14
New Riegel, OH 44853

Property Location:

3476 C.R. 14
New Riegel, OH 44853

Seneca Township, Seneca County

Shallow Gravelless Leach Trenches

By

Nathan Wright
Seth V. Layne

Geophyta, Inc.
2685 C.R. 254
Vickery, OH 43464

419-547-8538

September 19, 2019

APPROVED

To The Homeowner:

A septic system is designed based on all the information you provide and Geophyta Inc collects at the site. It must be accurate. This information includes local soil limits and topography, plus existing and future locations of your home, number of bedrooms, out buildings, driveways, drinking water wells, ponds, septic systems, and property lines. Geophyta Inc. relies on this information to construct detailed design drawings that must meet local health department regulations before installation.

Any design changes required by the local health department to meet existing regulations are the responsibility of Geophyta Inc.

Any information changes made by you after the initial site inspection are your responsibility and will result in additional charges to you above the original quote for services. These charges may include additional site inspection work, system redesign, and resubmitted drawings.

To The Installer:

The registered installer of this septic system design is responsible for preparing an "as-built" record, as stated in the Ohio Administrative Code Chapter 3701-29-09, Par. F (p.32) of the "Sewage Treatment System Rules," Ohio Department of Health, January 1, 2015. Additionally, the installer is responsible for measuring and recording distal pressure head and float switch settings as baseline measures for future operation and maintenance of any pressure distribution system (3701-29-15, Appendix B, Par. VI(p.93) of above referenced rules.

If the installer requests "as-built" record creation from Geophyta Inc., additional charges will be billed to the installer by Geophyta Inc. and must be arranged prior to installation.

Geophyta Inc. must assume that any registered installer has the knowledge, equipment, ability, and experience to properly layout, install, and create as-built drawings for any septic system design approved by a local board of health. This includes the ability to read detailed design prints with an associated bill of materials. For this reason, any Geophyta Inc project supervision prior to or during installation will be billed to the installer.

Any product substitution made by the installer that is not specifically permitted in the design prints may result in Health Dept. disapproval and will result in additional re-design costs billed to the installer.

Geophyta, Inc ©

HSTS Site/Soil Evaluation Information Sheet, Geophyta, Inc.

Customer:

Name:	RONALD BOGNER
Address:	3496 W. Co. Rd. 14
City, State:	NEW RIEGEL, OHIO 44853
Home Phone:	419-447-2418
Cell Phone:	419-618-8676
Email:	NONE

Property:

Parcel #:	
Current Owner:	SAME AS ABOVE
Address:	
City, State:	
Lot Size:	200 x 200
Right of Ways?	ROAD + ELECTRIC
Easements?	BACKYARD DRAIN TILE

Existing or Proposed or Lot Split: (circle one)

House Size: Rooms	3 bedrooms	electric:	(overhead) or buried
House Dim.w/Garage:	ft.xft.	phone:	overhead; (buried); n/a
Garage Size:	cars, ft.xft.	gas :	natural (propane) n/a
Water Source:	(well); public; cistern	hot tub:	yes (no)
Water Softener:	no (yes)		
Outbuildings:	no (yes), size:	geothermal system:	(no;) yes: (horizontal or vertical)
Pond:	(no) yes, size:		
System Type:	new or (replacement)		
Replacement Reason:	(failed); addition; n/a		

Comments:

I agree that the above information is accurate and can be used by Geophyta, Inc. to prepare a site/soil evaluation for septic system suitability. The site/soils report is for information purposes to be used by a designer and your local health department. This report does not guarantee build ability of a lot or approval of any septic system design. This is not a property boundary survey.

Ronald Bogner — Customer Signature

August 26, 2019 — Date

Payment received:

Copyright, 2017
Geophyta, Inc.

HSTS Replacement Layout - 3476 C.R. 14

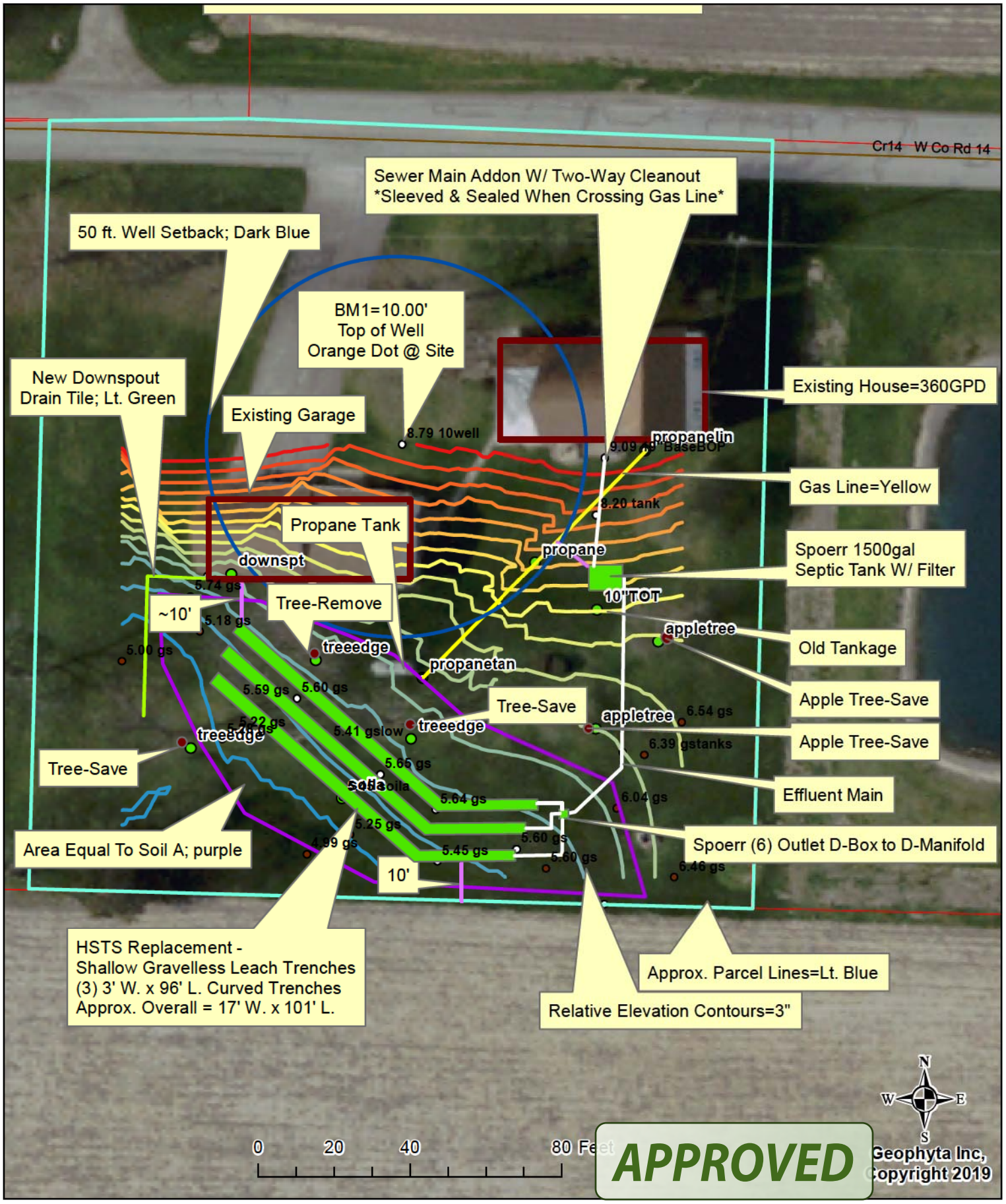

Site and Soil Evaluation for Sewage Treatment and Dispersal

County: **Seneca**
Township / Sec.: **Seneca**
Property Address: **3476 C.R. 14**
OR Location: **New Riegel**
Applicant Name: **Ronald Bogner**
Address: **3476 C.R. 14**
New Riegel OH 44853
Phone #: **419-618-8676**
Lot #:
Test Hole #: **A**
Latitude/Longitude: **83°14'15.159"W 41°3'52.916"N**
Method: ____ Pit ___ Auger **X** Probe; 1 1/4" dia.

Land Use / Vegetation: **Residential Turf**
Landform: **Glacial Till Plain**
Position on Landform: **Hillslope**
Percent Slope: **1 - 2**
Shape of Slope: **Linear - Linear**
Approximate Soil Type: **Glynwood SiL**

Date: **26-Aug-19**
Evaluator: **Nathan Wright**
Geophyta, Inc.
2685 C.R. 254
Vickery, OH 43464
Phone#: **419-547-8538**

Control #: **19- SEN - 27A - 208**

CPSS
Certified Professional Soil Scientist

Certification #: **19395**

Signature: Nathan Wright

Soil Profile		Estimating Soil Saturation			Estimating Soil Permeability							
		Munsell Color (hue, value, chroma)										
			Redoximorphic Features		Texture			Structure				
Horizon	Depth (inches)	Matrix Color	Concentrations	Depletions	Class	Approx. % Clay	Approx. % Fragments	Grade	Size	Type (shape)	Consistence	Other Soil Features
A	**0.0 - 10.5**	**10YR 3/2**	**none**	**none**	**SiL**	**20**	**0**	**3-STRONG**	**medium**	**gr**	**friable**	
Bt1	**10.5 - 17.5**	**10YR 4/3**	**5% 10YR 4/6**	**none**	**SiL**	**25**	**0**	**2-MOD**	**medium**	**sbk**	**firm**	
Bt2	**17.5 - 23.5**	**10YR 4/4**	**10% 10YR 4/6**	**10% 10YR 5/2**	**SiL**	**25**	**0**	**2-MOD**	**coarse**	**sbk**	**firm**	
Cg	**23.5 - 48.0**	**10YR 5/2**	**25% 10YR 4/6**	**matrix**	**SiCL**	**35**	**0**	**1-WEAK**	**medium**	**sbk**	**firm**	

Limiting Conditions	Depth to (in.)	Descriptive Notes	Remarks / Risk Factors: Values for Shallow Leach Trenches
Perched Seasonal Water Table	17.5	Restricted in Bt2 and Cg	Tyler Table: A - Bt1 horizon (5.5 - 17.5) ILR: SiL, HLLR: SiL
Apparent Water Table	>48		ILR(>30mg/L) = 0.6 gal/day/ft^2, ILR(<30mg/L) = 0.8 gal/day/ft^2
Highly Permeable Material	>48		HLLR = 3.0 gal/day/ft
Bedrock	>60	By Tile Probe	3 bedroom min. required absorption area = 600 sq.ft.
Other Restrictive Layer	>48		5xW Soil Absorption Box: 25' W x 120' L

Note : The evaluation shall include a complete site plan or site drawing including all requirements in paragraphs (B)(1) through (B)(4) of OAC 3701-29-08.

Geophyta, Inc. ©

Landforms
Upland*
Terrace
Flood Plain
Lake Pain
Beach Ridge
*Includes glacial till plain and end moraine

Position on Landform
Depression
Flat
Knoll
Crest
Hillslope
Footslope

Shape of Slope
Convex
Concave
Linear
Complex

Horizon Nomenclature

Master Horizons	
O	Predominantly organic matter (litter & humus)
A	Mineral, organic matter (humus) accumulation, loss of Fe, Al, clay
E	Mineral, loss of Si, Fe, Al, clay, organic matter
B	Subsurface accumulation of clay, Fe, Al, Si, humus; sesquioxides; loss of $CaCo_3$; subsurface soil structure
C	Little or no pedogenic alteration, unconsoilidated earthy material, soft bedrock
R	Hard bedrock

Horizon Suffixes	
a	Highly decomposed organic matter
b	Buried genetic horizon
d	Densic layer (physically root restrictive)
e	Moderately decomposed organic matter
g	Strong gley
i	Slightly decomposed organic matter
p	Plow layer or artificial disturbance
r	Weathered or soft bedrock
t	Illuvial accumulation of silicate clay
w	Weak color or structure within B
x	Fragipan characteristics

Horizon Modifiers
Numerical Prefixes: Used to denote lithologic discontinuities.
Numerical Suffixes: Used to denote subdivisions within a master horizon.

Soil Texture

Texture Class Abbreviations		Textural Class Modifiers	
Course Sand	cos	Gravelly	GR
Sand	s	Fine Gravelly	FGR
Fine Sand	fs	Medium Gravelly	MGR
Very Fine Sand	vfs	Coarse Gravelly	CGR
Loamy Coarse Sand	lcos	Very Gravelly	VGR
Loamy Sand	ls	Extremely Gravelly	XGR
Loamy Fine Sand	lfs	Cobbly	CB
Loamy Very Fine Sand	lvfs	Very Cobbly	VCB
Coarse Sandy Loam	cosl	Extremely Cobbly	XCB
Sandy Loam	sl	Stony	ST
Fine Sandy Loam	fsl	Very Stony	VST
Very Fine Sandy Loam	vfsl	Extremely Stony	XST
Loam	l	Bouldery	BY
Silt Loam	sil	Very Bouldery	VBY
Silt	si	Extremely Bouldery	XBY
Sandy Clay Loam	scl	Channery	CN
Clay Loam	cl	Very Channery	VCN
Silty Clay Loam	sicl	Extremely Channery	XCN
Sandy Clay	sc	Flaggy	FL
Silty Clay	sic	Very Flaggy	VFL
Clay	c	Extremely Flaggy	XFL

*Estimate approximate clay percentage within 5 percent

Soil Structure

Grade		Size		Type (Shape)	
Structureless	0	Very Fine	vf	Granular	gr
Weak	1	Fine	f	Angular Blocky	abk
Moderate	2	Medium	m	Subangular Blocky	sbk
Strong	3	Coarse	co	Platy	pl
		Very Coarse	vc	Prismatic	pr
		Extr. Coarse	ec	Columnar	cpr
		Very Thin*	vn	Single Grain	sg
		Thin*	tn	Massive	m
		Thick*	tk	Cloddy	CDY
		Very Thick*	vk		

* The sizes Very Thin, Thin, Thick, and Very Thick, are used when describing platy structure only. Substitute thin for fine, and thick for coarse when describing platy structure.

Moist Consistence	
Loose	l
Very Friable	vfr
Friable	fr
Firm	fi
Very Firm	vfi
Extremely Firm	efi

For a more detailed explanation on describing and sampling soils, please refer to the "Field Book for Describing and Sampling Soils"

Schoeneberger, P.J., Wysocki, D.A., Benham, E.C., and Broderson, W.D. (editors) 2002. Field book for describing and sampling soils, version 2.0. Natural Resources Conservation Service, USDA, National Soil Survey Center, Lincoln, NE.

In-Soil Leachfield Calculations - Gravelless Chambers			
Owner: Bogner: Site A	**Min. Required**	**Actual**	**Comment**
Home Size (bedrooms)	3		
Water Use (120 gal/day/bedroom)	360	432	
Limiting Condition	PSWT		
Depth To Limiting Condition (inches)	17.5		
Depth To Bottom of Leach Trench (in.)	5.5		
Infiltration Depth (in.)	12.0		
Most Limiting Soil Texture	SiL		
Tyler Table Values			
Infiltration Loading Rate (gal/day/sq. ft)	0.6	0.6	
Hydraulic Linear Loading Rate (gal/day/ft)	3.0	3.0	
Active Trench Bottom Width (ft)(HLLR/ILR)	5.00		
Absorption Line Lengths (ft)(DDF/HLLR)	120	96	
Leachfield Design Requirements	**Minimum**		
	Required	**Actual**	
Active Absorption Area (DDF/ILR)(sq. ft.)	600		
Active Absorption Area Adjusted (0.75)(sq. ft.)	450	576	
25% Resting Absorption Area (sq.ft.)	113	288	
Total Adjusted Absorption Area (sq.ft.)	563	864	
Individual Trench Bottom Width (ft)	3.0	3.0	
Total Trench Bottom Width (ft)	4.69	9.0	
Total Number of Leach Lines	3	3	
Active Leach Lines	2	2	
Resting Leach Lines	1	1	
Total Lineal Feet of Trench (ft)	360	288	
Trench Separation Distance (ft)	7	7	
Total Leachfield Width (ft)	17	17	
Total Leachfield Length (ft)	120	96	20% Length Reduction

APPROVED

Geophyta, Inc. ©

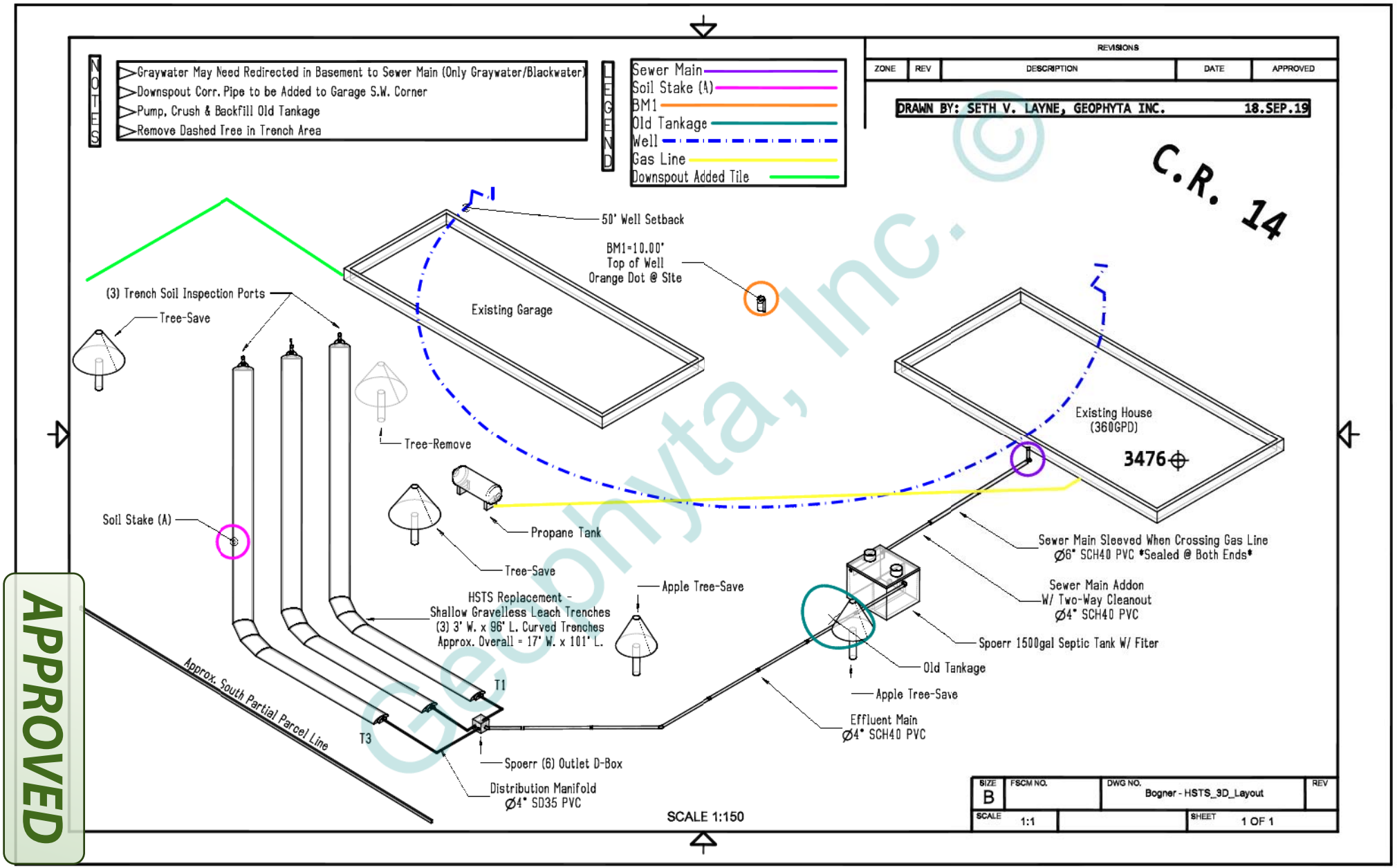

Geophyta, Inc. ©

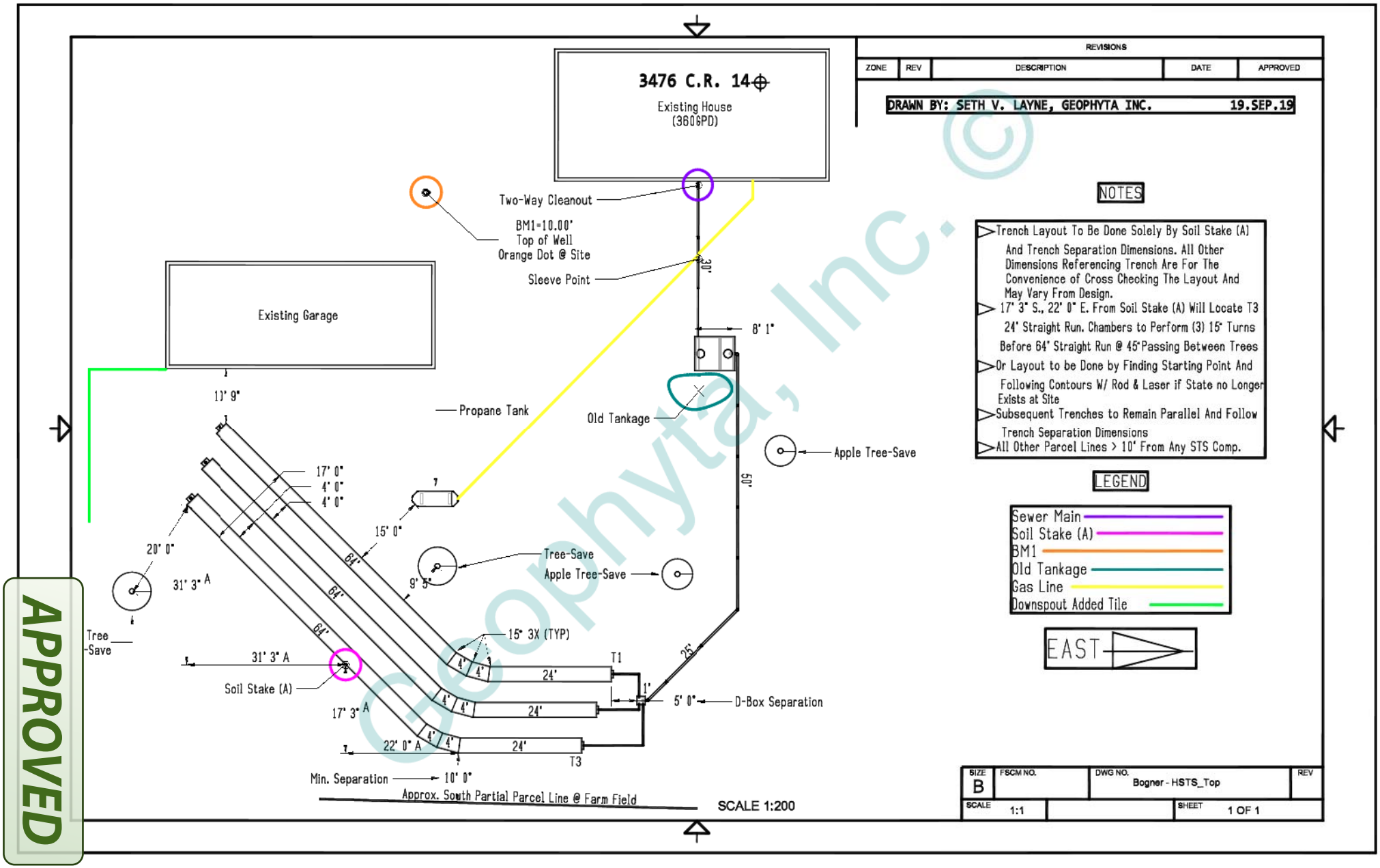

APPROVED
Geophyta, Inc. ©

REVISIONS				
ZONE	REV	DESCRIPTION	DATE	APPROVED

DRAWN BY: SETH V. LAYNE, GEOPHYTA INC. 19.SEP.19

NOTES

- Trench Depths Into Native Soil Due To Soil Uneveness:
  Avg. = 4.3" Range = 2.6" - 5.5"
- Infiltration Into Native Soil: (PSWT @ 17.5")
  Avg. = 13.2" Range = 12.0" - 14.9"
- Additional Soil Cover Over Trenches: (Silt Loam or Better)
  Avg. = 9.7" Range = 8.5" - 11.4")
- Sewer Main to Have Suggested Fall or .125"/1'
- Effluent Main to Have Suggested Fall or 1"/100'
- Effluent Main May Need Cover Soil Near D-Box & to Maintain 1' Cover Soil Along Path For Freeze Protection

LEGEND

Soil Surface
Cover Soil
Zero Elevation Reference

ELEVATION VIEW - SOUTH TO NORTH EAST

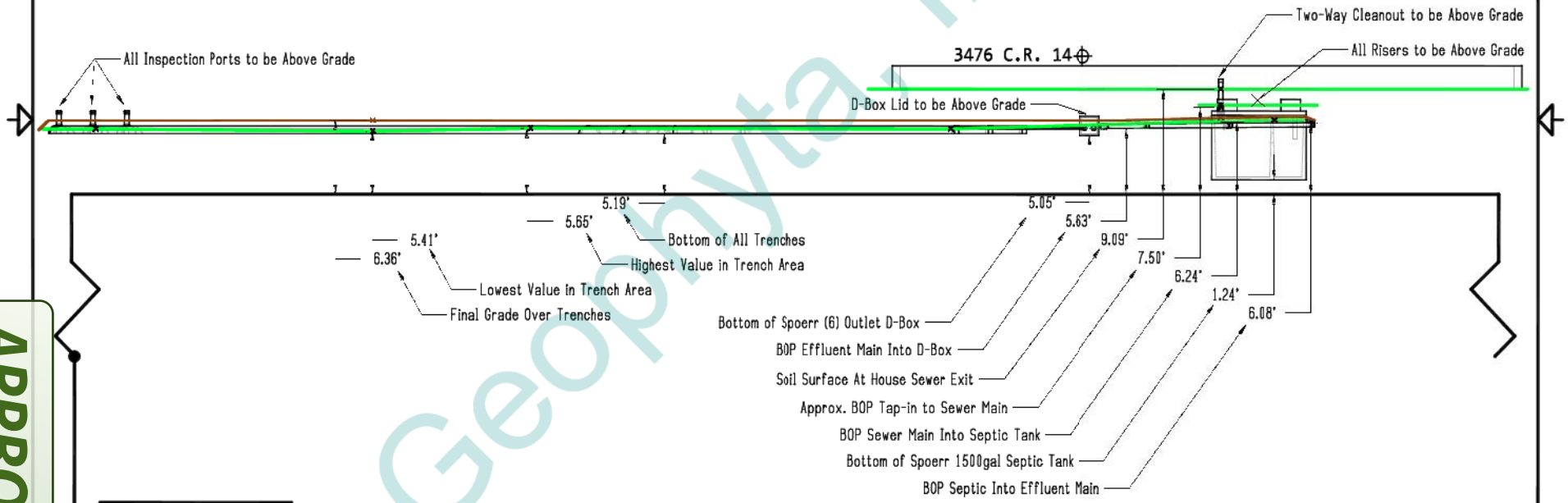

ZERO ELEVATION REFERENCE
BM1=10.00' TOP OF WELL
ORANGE DOT @ SITE

SCALE 1:105

SIZE	FSCM NO.	DWG NO.	REV
B		Bogner - HSTS_Elevation	
SCALE 1:1		SHEET 1 OF 1	

APPROVED

Geophyta, Inc. ©

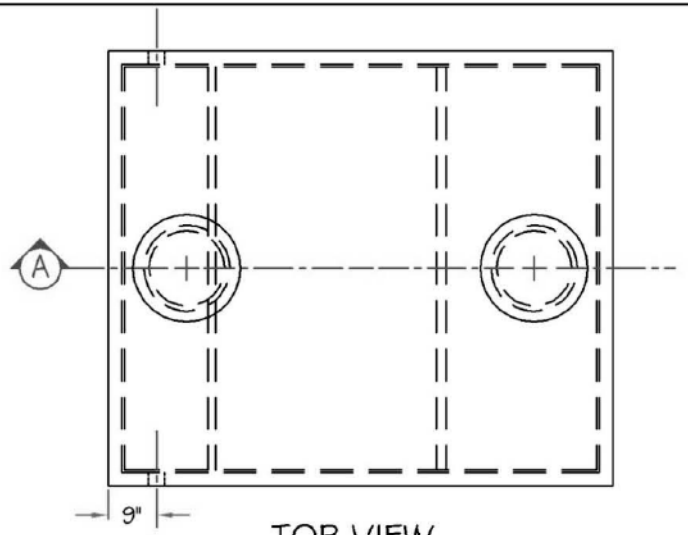

TOP VIEW

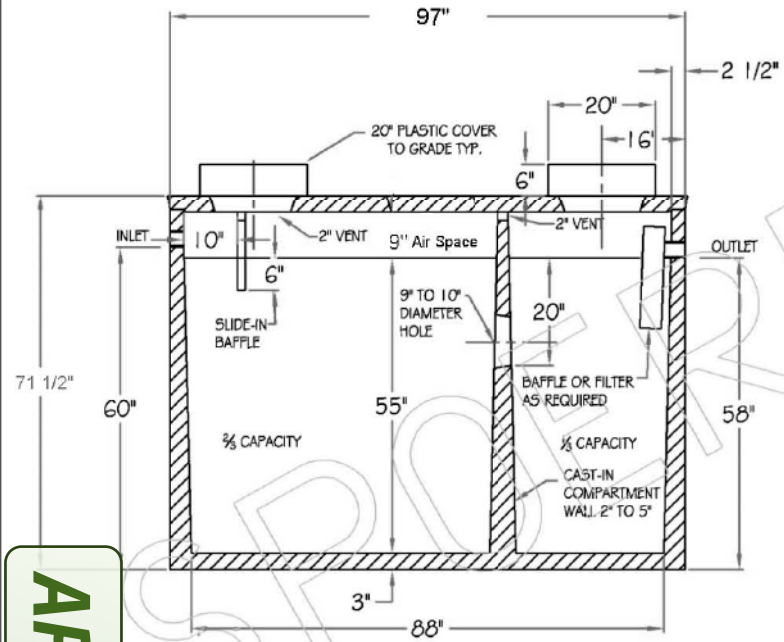

A SECTION VIEW (SIDE)

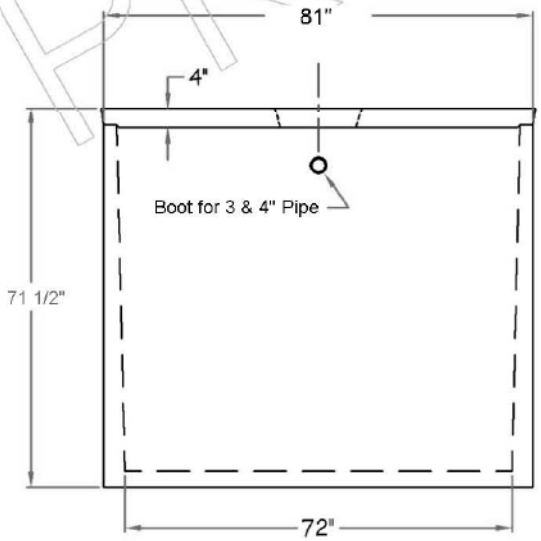

END VIEW

SPECIFICATIONS:

1. PIPE PENETRATIONS - MEET OR EXCEED ATMC C-1644-06

2. JOINT SEALANT - BUTYL RUBBER BLEND - MEETS OR EXCEEDS ASTM C990

3. CONCRETE - 4500 psi @ 28 DAYS

4. RISERS - CAST INTO LID AT TIME OF PRODUCTION - INLET AND OUTLET

5. WEIGHT 12,000 lbs

APPROVED

SPOERR PRECAST CONCRETE, INC.
2020 CALDWELL ST.
SANDUSKY, OH 44870
PHONE 1-800-252-5205

NOTES:

Excavation 7'9" x 9'

1500 Gallon Septic Tank

DESIGNER	JHP		
ENGINEER	GKM	SCALE	VARIES
REVISION		DRAWING #	1 OF 1

SPOERR PRECAST

PL-122 Filter

The PL-122 was the original Polylok filter. It was the first filter on the market with an automatic shut-off ball installed with every filter. When the filter is removed for regular servicing, the ball will float up and prevent any solids from leaving the tank. Our patented design cannot be duplicated.

Features:

- Offers 122 linear feet of 1/16" filter slots, which significantly extends time between cleaning.
- Has a flow control ball that shuts off the flow of effluent when the filter is removed for cleaning.
- Has its own gas deflector ball which deflects solids away.
- Installs easily in new tanks, or retrofits in existing systems.
- Comes complete with its own housing. No gluing of tees or pipe, no extra parts to buy.
- Has a modular design, allowing for increased filtration.

PL-122 Installation:

Ideal for residential waste flows up to 1,500 gallons per day (GPD). Easily installs in any new or existing 4" outlet tee.

1. Locate the outlet of the septic tank.
2. Remove the tank cover and pump tank if necessary.
3. Glue the filter housing to the outlet pipe, or use a Polylok Extend & Lok if not enough pipe exists.
4. Insert the PL-122 filter into tee.
5. Replace and secure the septic tank cover.

PL-122 Maintenance:

The PL-122 Effluent Filter will operate efficiently for several years under normal conditions before requiring cleaning. It is recommended that the filter be cleaned every time the tank is pumped, or at least every three years.

1. Do not use plumbing when filter is removed.
2. Pull PL-122 cartridge out of the tee.
3. Hose off filter over the septic tank. Make sure all solids fall back into septic tank.
4. Insert filter back into tee/housing.

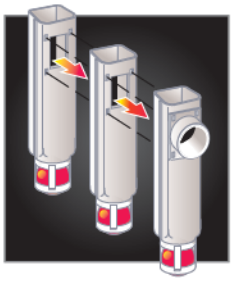

Polylok offers the only filter on the market where you can get more GPD by simply snapping our filters together!

1 Filter = 1500 GPD
2 Filters = 3000 GPD
3 Filters = 4500 GPD

Patent Numbers
6,015,488 & 5,871,640

Filter Ready Adapter
Connects to Septic Tank Wall

Outdoor SmartFilter® Alarm
Polylok, Zabel & Best filters accept the SmartFilter® switch and alarm.

REVISIONS				
ZONE	REV	DESCRIPTION	DATE	APPROVED

Drawn By Nathan Wright, Geophyta Inc. 13-Aug-13

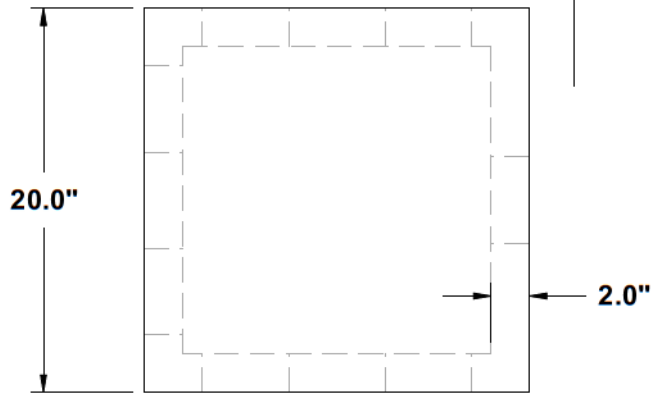

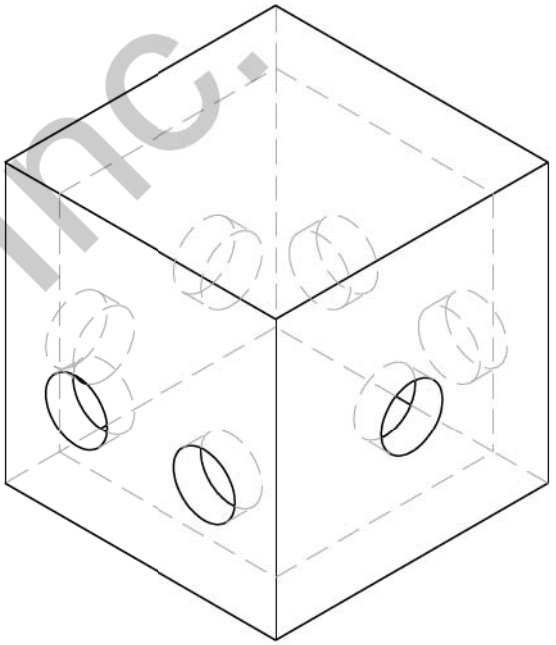

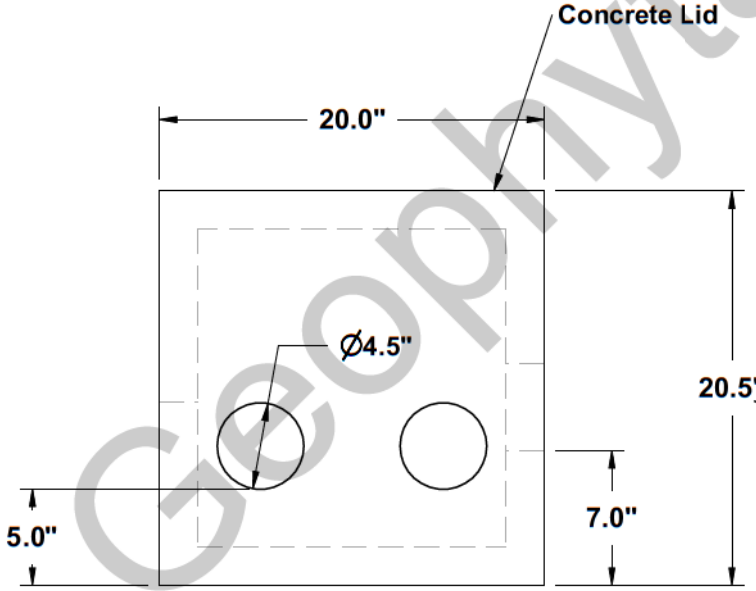

Add on risers in 6 inch increments as needed. Min. Ht = 20.5"

SIZE	FSCM NO.	DWG NO.	REV
A		Spoerr 6-Outlet D-Box	
SCALE 1:10		SHEET	

Geophyta, Inc. ©

INFILTRATOR®
water technologies

Quick4 PLUS CHAMBER SYSTEMS

The Quick4® Plus Standard Low Profile (LP) Chamber

Quick4 Plus™ Series

The Quick4 Plus Standard Low Profile (LP) offers maximum strength through its four center structural columns. This chamber can be installed in a 36-inch-wide trench. It is shorter in height than Infiltrator's other Standard model chambers, allowing for shallower installation. Like the original line of Quick4 chambers, it offers advanced contouring capability with its Contour Swivel Connection™, which permits turns up to 15°, right or left. The Quick4 Plus All-in-One 8 and Quick4 Plus Endcaps provide increased flexibility in system design and configurations.

Maximum Strength

Quick4 Plus Standard LP Chamber Specifications

Size 34"W x 53"L x 8"H (864 mm x 1346 mm x 203 mm)
Effective Length 48" (1219 mm)
Louver Height 6.3" (160 mm)
Storage Capacity 32 gal (121 L)
Invert Height 3.3" (84 mm), 9.6" (244 mm)

Quick4 Plus Standard Low Profile (LP) Chamber Benefits:

- Low profile design makes this chamber ideal for shallow applications
- Reduces imported fill needed for cap and fill systems
- Four center structural columns offer superior strength
- Advanced contouring connections
- Latching mechanism allows for quick installation
- Four-foot chamber lengths are easy to handle and install
- Supports wheel loads of 16,000 lbs/axle with 12" of cover

Quick4 Plus All-in-One Periscope Benefits:

- Allows for raised invert installations
- 180° directional inletting
- 12" raised invert is ideal for serial applications

Quick4 Plus All-in-One 8 Endcap Benefits:

- May be used at the end of chamber row for an inlet/outlet or can be installed mid-trench
- Mid-trench connection feature allows center feed inletting of chamber rows
- Center-feed connection allows for easy installation of serial distribution systems
- Variable pipe connection options allow for side, end or top inletting
- Piping drill points are set for gravity or pressure pipe

Quick4 Plus Endcap Benefits:

- Simple, flat design
- Allows installation of a pipe from the end only
- Piping drill points are set for gravity or pressure pipe

Certified by the International Association of Plumbing and Mechanical Officials (IAPMO)

IAPMO R&T

APPROVED in _____

Quick4 Plus™ Series

Quick4 Plus Standard Low Profile Chamber

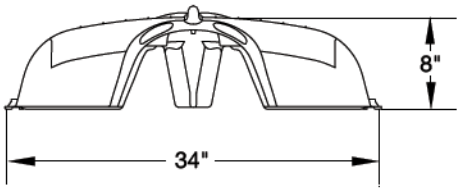

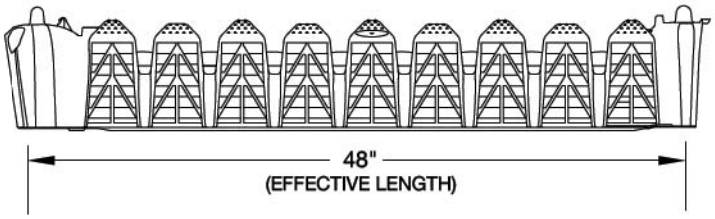

Quick4 Plus All-in-One 8 Endcap

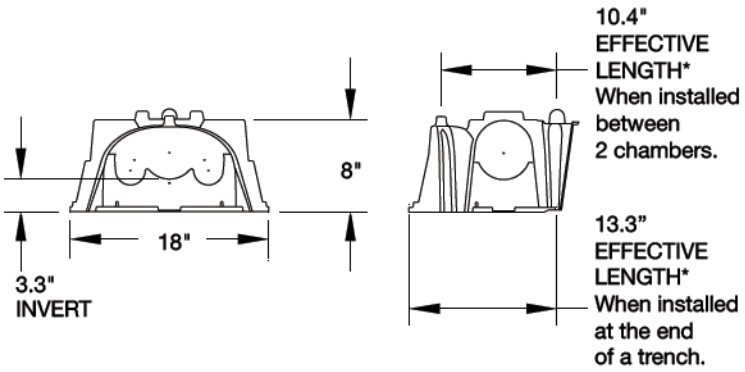

Quick4 Plus Endcap

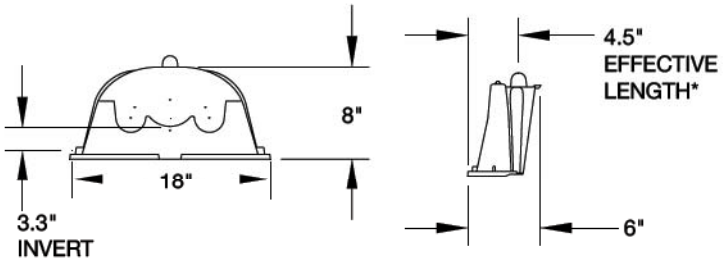

Quick4 Plus All-in-One Periscope

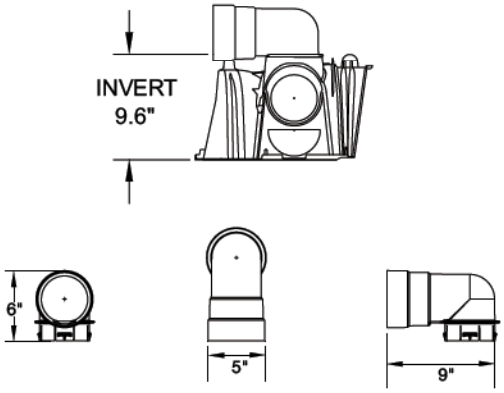

INFILTRATOR WATER TECHNOLOGIES, LLC ("INFILTRATOR")
Infiltrator Water Technologies, LLC STANDARD LIMITED Drainfield WARRANTY

(a) The structural integrity of each chamber, endcap, EZflow expanded polystyrene and/or other accessory manufactured by Infiltrator ("Units"), when installed and operated in a leachfield of an onsite septic system in accordance with Infiltrator's instructions, is warranted to the original purchaser ("Holder") against defective materials and workmanship for one year from the date that the septic permit is issued for the septic system containing the Units; provided, however, that if a septic permit is not required by applicable law, the warranty period will begin upon the date that installation of the septic system commences. To exercise its warranty rights, Holder must notify Infiltrator in writing at its Corporate Headquarters in Old Saybrook, Connecticut within fifteen (15) days of the alleged defect. Infiltrator will supply replacement Units for Units determined by Infiltrator to be covered by this Limited Warranty. Infiltrator's liability specifically excludes the cost of removal and/or installation of the Units.

(b) THE LIMITED WARRANTY AND REMEDIES IN SUBPARAGRAPH (a) ARE EXCLUSIVE. THERE ARE NO OTHER WARRANTIES WITH RESPECT TO THE UNITS, INCLUDING NO IMPLIED WARRANTIES OF MERCHANTABILITY OR FITNESS FOR A PARTICULAR PURPOSE

(c) This Limited Warranty shall be void if any part of the chamber system is manufactured by anyone other than Infiltrator. The Limited Warranty does not extend to incidental, consequential, special or indirect damages. Infiltrator shall not be liable for penalties or liquidated damages, including loss of production and profits, labor and materials, overhead costs, or other losses or expenses incurred by the Holder or any third party. Specifically excluded from Limited Warranty coverage are damage to the Units due to ordinary wear and tear, alteration, accident, misuse, abuse or neglect of the Units; the Units being subjected to vehicle traffic or other conditions which are not permitted by the installation instructions; failure to maintain the minimum ground covers set forth in the installation instructions; the placement of improper materials into the system containing the Units; failure of the Units or the septic system due to improper siting or improper sizing, excessive water usage, improper grease disposal, or improper operation; or any other event not caused by Infiltrator. This Limited Warranty shall be void if the Holder fails to comply with all of the terms set forth in this Limited Warranty. Further, in no event shall Infiltrator be responsible for any loss or damage to the Holder, the Units, or any third party resulting from installation or shipment, or from any product liability claims of Holder or any third party. For this Limited Warranty to apply, the Units must be installed in accordance with all site conditions required by state and local codes; all other applicable laws; and Infiltrator's installation instructions.

(d) No representative of Infiltrator has the authority to change or extend this Limited Warranty. No warranty applies to any party other than the original Holder. The above represents the Standard Limited Warranty offered by Infiltrator. A limited number of states and counties have different warranty requirements. Any purchaser of Units should contact Infiltrator's Corporate Headquarters in Old Saybrook, Connecticut, prior to such purchase, to obtain a copy of the applicable warranty, and should carefully read that warranty prior to the purchase of Units.

INFILTRATOR®
water technologies

4 Business Park Road
P.O. Box 768
Old Saybrook, CT 06475
860-577-7000 • Fax 860-577-7001
1-800-221-4436
www.infiltratorwater.com

U.S. Patents: 4,759,661; 5,017,041; 5,156,488; 5,336,017; 5,401,116; 5,401,459; 5,511,903; 5,716,163; 5,588,778; 5,839,844 Canadian Patents: 1,329,959; 2,004,564 Other patents pending.
Infiltrator, Equalizer, Quick4, and SideWinder are registered trademarks of Infiltrator Water Technologies. Infiltrator is a registered trademark in France. Infiltrator Water Technologies is a registered trademark in Mexico. Contour, MicroLeaching, PolyTuff, ChamberSpacer, MultiPort, PosiLock, QuickCut, QuickPlay, SnapLock and StraightLock are trademarks of Infiltrator Water Technologies.
PolyLok is a trademark of PolyLok, Inc. TUF-TITE is a registered trademark of TUF-TITE, INC. Ultra-Rib is a trademark of IPEX Inc.
© 2016 Infiltrator Water Technologies, LLC. All rights reserved. Printed in U.S.A.

Contact Infiltrator Water Technologies' Technical Services Department for assistance at 1-800-221-4436

REVISIONS				
ZONE	REV	DESCRIPTION	DATE	APPROVED

Drawn By Nathan Wright, Geophyta Inc. 4-Apr-15

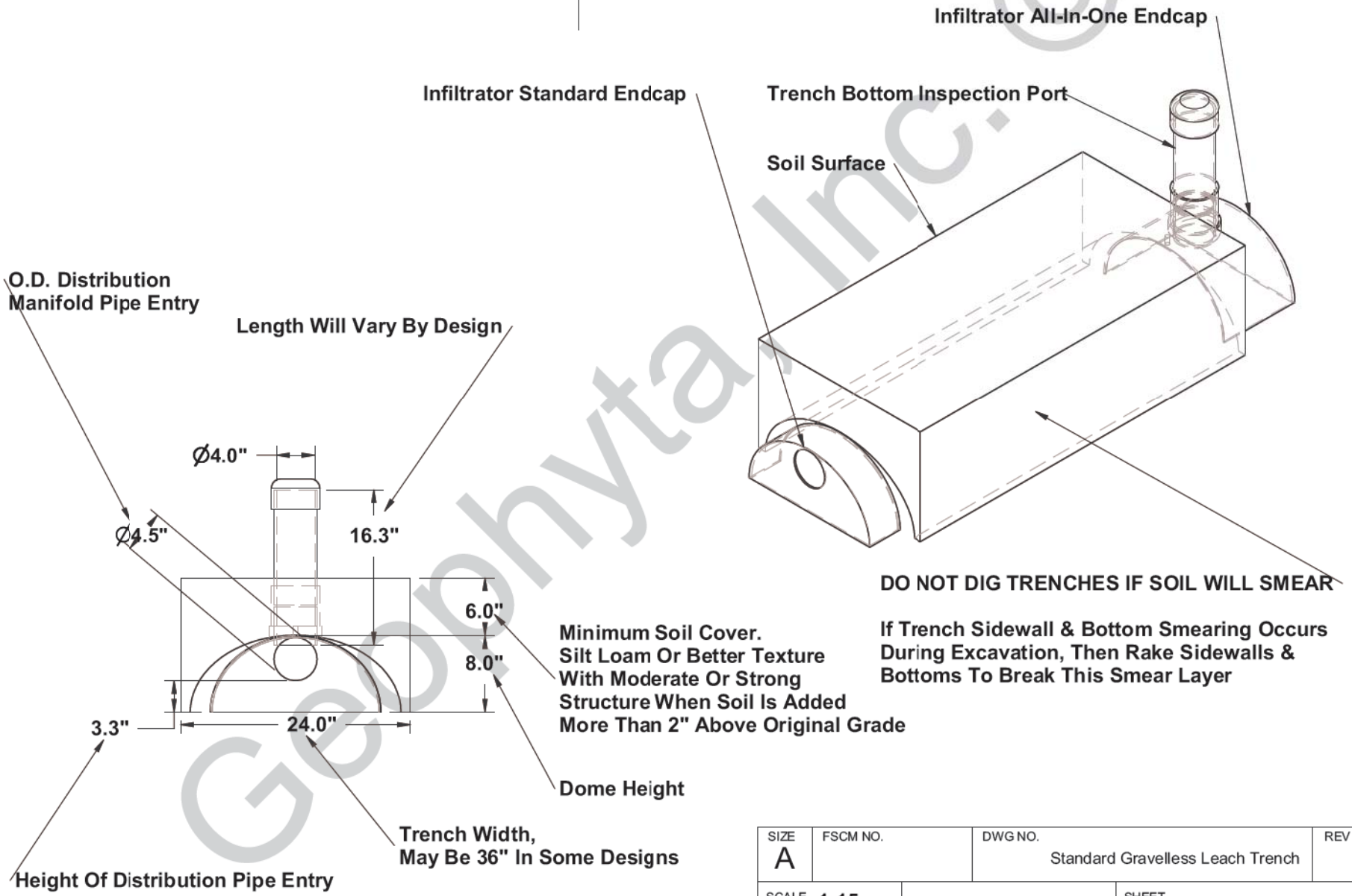

Geophyta Inc. ©

SIZE	FSCM NO.	DWG NO.	REV
A		Standard Gravelless Leach Trench	
SCALE 1:15		SHEET	

REVISIONS				
ZONE	REV	DESCRIPTION	DATE	APPROVED

Drawn By Nathan Wright, Geophyta Inc. 9-Oct-13

A Minimum Of Two Stainless Steel Wood Screws Required To Attach PVC Pipe To Endcap

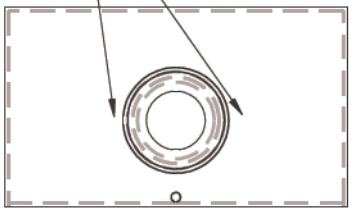

4" Sch40 PVC Pipe, Coupler, & Cap

Infiltrator All-In-One Endcap.
See B.O.M. For Actual Part Number

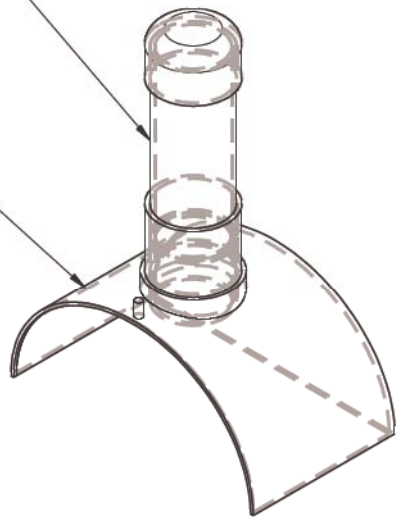

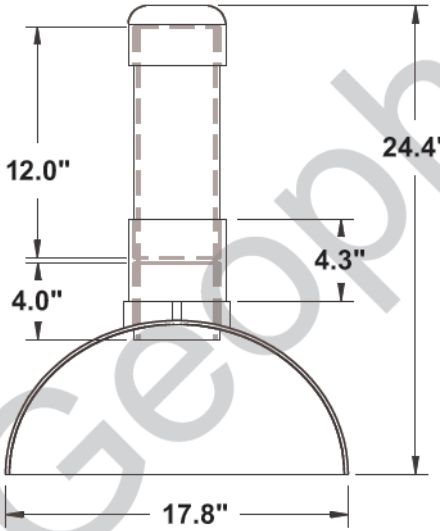

Geophyta, Inc. ©

SIZE	FSCM NO.	DWG NO.	REV
A		Trench End Soil Inspection Port	
SCALE 1:10			SHEET

Bill of Materials - 3476 C.R. 14, HSTS Replacement - Shallow Gravelless Leach Trenches			
Quantity	**Part Name**	**Section**	**Comment**
1	SCH40PVC**4inch**TwoWayCleanoutTeeSxSxS	Sewer Main Replaced to Foundation	Two-Way Cleanout (Tee)
1	SCH40PVC**4inch**pipe2ft.		Two-Way Cleanout (Tee to Cap)
1	SCH40PVC**4inch**Cap		Two-Way Cleanout Port (Cap)
2	SCH40PVC**4inch**Coupler		Config. By Installer
3	SCH40PVC**4inch**pipe10ft.		
1	SCH40PVC**6inch**Coupler	Sewer Main Sleeve Crossing Gas Line	Sealed @ Both Ends
2	SCH40PVC**6inch**pipe10ft.		
1	*Septic Tank*	Septic Tank	**Spoerr 1500gal Septic W/ 12" Risers**
1	*Septic Tank Filter*		**PolyLok-122 or Equiv.**
6	SCH40PVC**4inch**Coupler	Effluent Main	Config. By Installer
2	SCH40PVC**4inch**45DegreeEll		
1	SCH40PVC**4inch**90DegreeEll		
1	SCH40PVC**4inch**pipe1ft.		
1	SCH40PVC**4inch**pipe5ft.		
7	SCH40PVC**4inch**pipe10ft.		
1	*Distribution Box*	(6) Outlet D-Box	**Spoerr (6) Outlet D-Box**
3	SDsolid**4inch**90DegreeEll	Distribution Manifold	Config. By Installer
1	SDsolid**4inch**pipe1.17ft. W/ bell		
1	SDsolid**4inch**pipe1.67ft. W/ bell		
1	SDsolid**4inch**pipe4.5ft. W/ bell		
1	SDsolid**4inch**pipe5ft. W/ bell		
1	SDsolid**4inch**pipe8ft. W/bell		
1	SDsolid**4inch**pipe8.17ft. W/bell		
1	SDsolid**4inch**pipe10ft. W/bell		
3	*Infiltrator Q4 Plus End Cap*	Leach Trenches	See Detail Print
3	*Trench 3' W. x 4' L. x 8" H. Q4 Plus Standard LP 96' L.*		**(72) 3 ft. W. Infiltrator Chambers**
-	*Additional Cover Soil Over Trenches (Silt Loam or Better)*		**~52.0 yd.^3 @ 91.0 Tons**
3	SCH40PVC**4inch**pipe4inch		

Geophyta, Inc.©

3	SCH40PVC**4inch**pipe1ft.	Trench Soil Inspection Port	See Detail Print
3	SCH40PVC**4inch**Coupler		
3	SCH40PVC**4inch**Cap		
3	*Infiltrator Q4 Plus All-In-One End Cap*		
Additional Notes			
Pump, Crush & Backfill Old Tankage			
Add Downspout Drain Tile For Garage Approx. 45' Corr. Solid Pipe			
-	Grass Seed	2 lbs./1000 ft.^2 K. Bluegrass	~1750 ft.^2 @ 3.5 lbs.
-	Straw Mulch For Grass Establishment	Homeowner's Choice	~1750 ft.^2
-	Grass Establishment Fertilizer	10 lbs. 20-10-10/1000 ft.^2	~1750 ft.^2 @ 17.5 lbs.
******Call OUPS before you dig.******			
Installer substitution of materials not specfied in this Bill Of Materials may void Health Dept. approval of this design and will result in a re-design fee and is the sole responsibility of the installer.			
Design Prints Take Precedence Over This Bill of Materials. This is a best estimate of materials required and is provided as a convenience to installers. This BOM is not required for design approval.			

Geophyta, Inc. ©

Operation and Maintenance Procedures

Home Septic Treatment Systems With Effluent Distribution Through In-Soil Leach Trenches

Home septic treatment systems are biologically based systems. They rely on both anaerobic and aerobic microorganisms to process human waste. These systems may utilize processing, storage, and pumping tanks. A soil absorption component, the leachfield, also processes, treats, and disperses septic effluent. Any abuse of this biological treatment system will result in less efficient sewage treatment and early failure of your new system.

Improper operation and/or maintenance of your home septic treatment system will result in its failure.

Geophyta, Inc. strongly recommends that a homeowner hire a professional service provider to inspect and maintain your system. Your county health department has a list of registered service providers. Make sure that your service provider has septic tank and leachfield maintenance experience.

1) **Homeowner Responsibility:**
   a) The system owner is responsible for the continuous operation and maintenance of this home septic treatment system
   b) Your county health department may require third-party inspection and maintenance of your home septic treatment system.
   c) Home Interior Design & Appliance Selection:
      i) Install water conserving fixtures such as low flow shower heads, low flow toilets, and front loading washers.
      ii) Space out water use throughout the day and week. Avoid doing all laundry in one day.
      iii) Repair all water leaking fixtures.
      iv) Eliminate garbage disposals, or limit their use. Collect food scraps with sink strainers for disposal as trash or for composting; this includes coffee grounds.
      v) DO NOT pipe sump pump output into your sewer line.
   d) Home Landscaping Limitations:
      i) Do not pipe roof downspouts or any other rainwater drainage into the septic or dose tanks.
      ii) Divert all downspouts or other rainwater drainage away from your entire septic system.
      iii) Divert all downspouts or other rainwater drainage away from the leachfield area.
      iv) Do not drive or park cars, boats, heavy equipment, or other vehicles on or near septic system tanks and leachfield areas.

Geophyta, Inc. ©

v) Do not add additional soil fill on or near the leachfield. This will limit air movement into the soil needed for effluent treatment and may cause system failure.
vi) Limit lawnmower traffic on the leachfield when soil is excessively wet.
vii) Do not plant any deep rooted plants on top of or near your leachfield soil absorption area.

e) Home Resident Responsibilities:
   i) Only flush or drain bio-degradable human waste, toilet paper, laundry and dish and personal care soaps, and water into your home septic treatment system.
   ii) Severely limit disposal of food fats, oils, and greases. These will clog your system.
   iii) Do not flush or drain undiluted bleach, cleansers, or drain cleaners.
   iv) Do not flush any non-biodegradable items. For example, plastic items.
   v) Do not flush or drain motor oils, greases, anti-freezes, cleaners, etc.
   vi) Do not flush cat litter.
   vii) Do not flush paper towels, facial tissue, cigarette butts, disposable diapers, sanitary napkins, tampons, or condoms.
   viii) Do not flush prescription or over-the-counter drugs. Antibiotics and cancer treatment drugs are very harmful to your home septic treatment system.
   ix) Do not dump solvents like dry cleaning fluid, pesticides, photographic chemicals, paint thinner down the drain.
   x) Don't use septic tank additives, unless health department approved.
   xi) Don't drain a hot tub or large amounts of water into your septic system.

f) Home Improvement/Expansion:
   i) Contact your county sanitarian before adding new driveways, decks, patios, pools, and outbuildings not identified on your original layout plan to make sure all setback distances from your septic system tanks and mound are met.
   ii) Contact your county sanitarian before adding bedrooms and/or increasing your home occupancy. This may overload your septic system. Septic system expansion may be required to prevent failure.

g) Homeowner Cautions:
   i) **DO NOT ENTER TANKS WITHOUT PROPER SAFETY EQUIPMENT.** Septic and dose tanks contain noxious and deadly gases.
   ii) Pump or dose tanks and control boxes contain electrical components. **ELECTRICAL SHOCK HAZARD CAN EXIST WITH IMPROPERLY WIRED OR FAILING COMPONENTS.**
   iii) Always keep tank fall guards in place, except for the time needed to replace components when safety equipment is present.
   iv) Always replace and secure septic and dose tank lids after completing any inspection.
   v) Any disconnection or removal of filters, screens, floats, alarms, and/or control panels will result in system failure.
   vi) Contact your county sanitarian for allowed homeowner maintenance and repair of your septic system.

Geophyta, Inc. ©

2) Inspection & Maintenance Requirements:

a) Perform inspection & maintenance **every six months**.

b) Review Baseline Operation and Maintenance Data:

i) The installer of your system set and recorded all float/liquid level heights, pump down times, cycles per day, and distal head pressures required in the design specifications.

ii) Review all previous six month inspection data.

c) Identify any house additions, patios, pools, ponds, driveways, outbuildings, etc. added since the last inspection that may impact the home septic treatment system. Draw a sketch of these differences.

d) Inspect the house sewer main two-way cleanout tee bottom:

i) Check for clogging.

ii) Check for continuous clear water flows from the home.

e) Evaluate Septic Tank & Pump Tank:

i) Measure sludge and scum depths; pump tank when cumulative thickness is 1/3 of the tank depth.

ii) Look for signs of clogging and tank damage.

iii) Look for signs of tank and riser leakage.

iv) Clean & inspect septic tank outlet filter.

v) Make sure lids are securely attached to risers.

f) Evaluate Pump/Dose Tank & Pumping Equipment:

i) Measure sludge and scum depths; pump tank when septic tank is pumped.

ii) Look for signs of clogging and tank damage.

iii) Look for signs of tank and riser leakage.

iv) Inspect and assure proper functioning of floats or other liquid level controls.

v) Clean and inspect dose pump outlet filter. May not be present in some designs.

vi) Inspect and assure proper condition and functioning of the effluent pump.

vii) Make sure lids are securely attached to risers.

g) Evaluate Drain Fields:

i) Inspect all leachfield soil inspection tubes for surface condition, surface color, and depth of ponded effluent, if present.

ii) Look for surfacing effluent.

iii) Look for excessively moist soil around leachfield area.

iv) Identify appropriate vegetative cover.

v) Look for surface disturbances, compaction, abnormal settling, and erosion.

vi) Identify any deep rooted vegetation recently planted near the leachfield area.

h) Switch leachfield resting trench in D-box:

i) Determine a rotation sequence for closing off flow to the resting trench/trenches.

ii) Open the previously rested leach trench.

iii) Close the next trench in sequence for resting.

i) Measure Pump Run Time and/or Drawdown:

i) For demand dosed systems, verify original design effluent drawdown depth.

Geophyta, Inc. ©

ii) For time dosed systems, verify original design pump run time.
iii) For systems with a cycle counter or run time meter, record the current values.

j) Test Alarms:
i) Evaluate proper function of low liquid level alarm.
ii) Evaluate proper function of high liquid level alarm and warning light.

3) Findings & Repairs:

a) All findings during inspection and maintenance must be recorded.
b) Any system adjustments must be recorded.
c) Any system deficiencies, worn out components, and/or damage must be repaired to return your septic system to a properly functioning state.
d) All repairs must be recorded.

Geophyta, Inc. ©